16mm scale switcher for 32mm or 45mm gauge track.



This is not an easy model to print, you must use support on some of the STL files (depending on your printer) and your printer need to be well calibrated to reduce trimming work of printed parts. But it is printable on a ”cheaper” printer
This model is perfect for kitbashing and i will release some variations of the loco in the future.
You can use many different drive unit if you want to motorise the loco , i have used IP Engineerings ”Budget Electric Chassis Kit” for my build on these pictures.
If you want to make a static model the only thing that you probably want to do is to get some barbecue sticks and use it as an axel for the wheels.
There are two versions on some of the print files, ”a” or ”b” .
Files with ”a” is for a static version or for your own drive units, and the ”b” files are for IP engineers drive unit.
The windows are cut from some package plastic with help of the template and the headlight glass is printed with clear PLA.

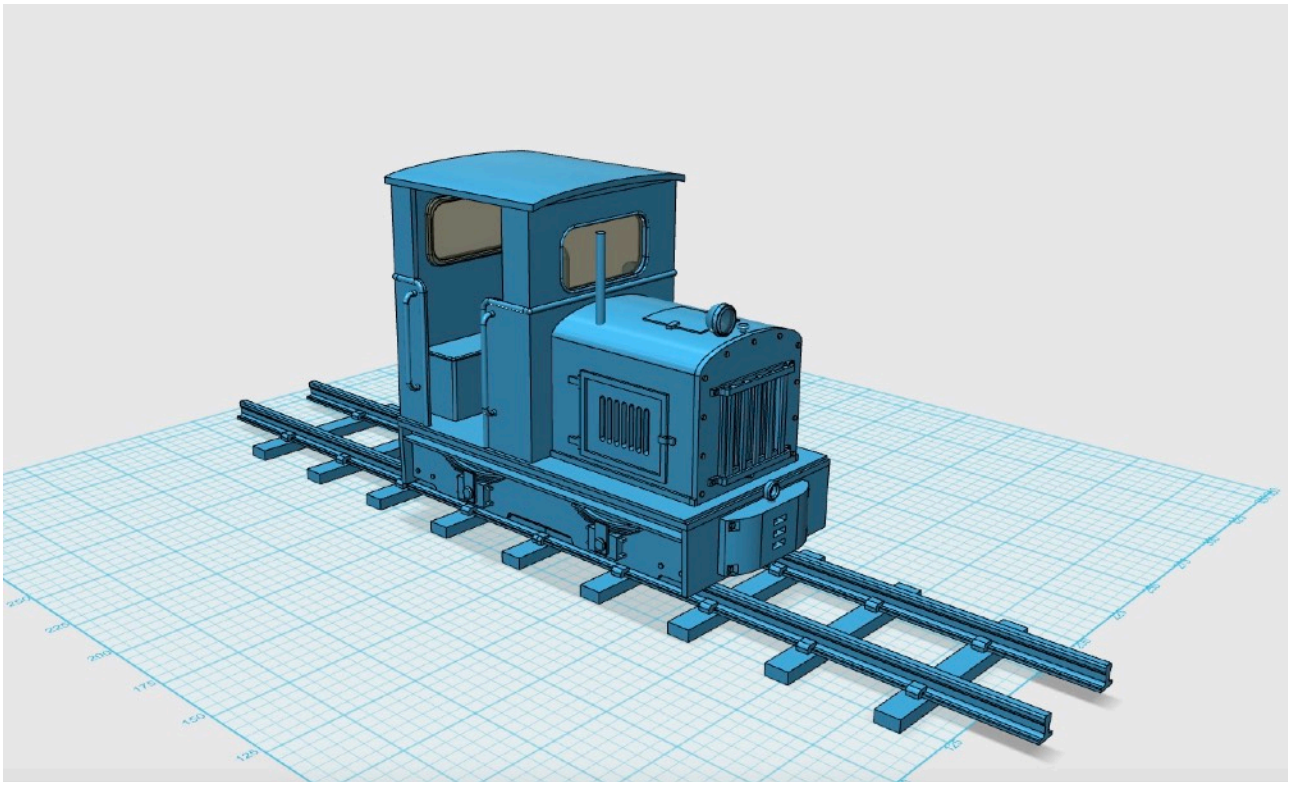

Frame 1

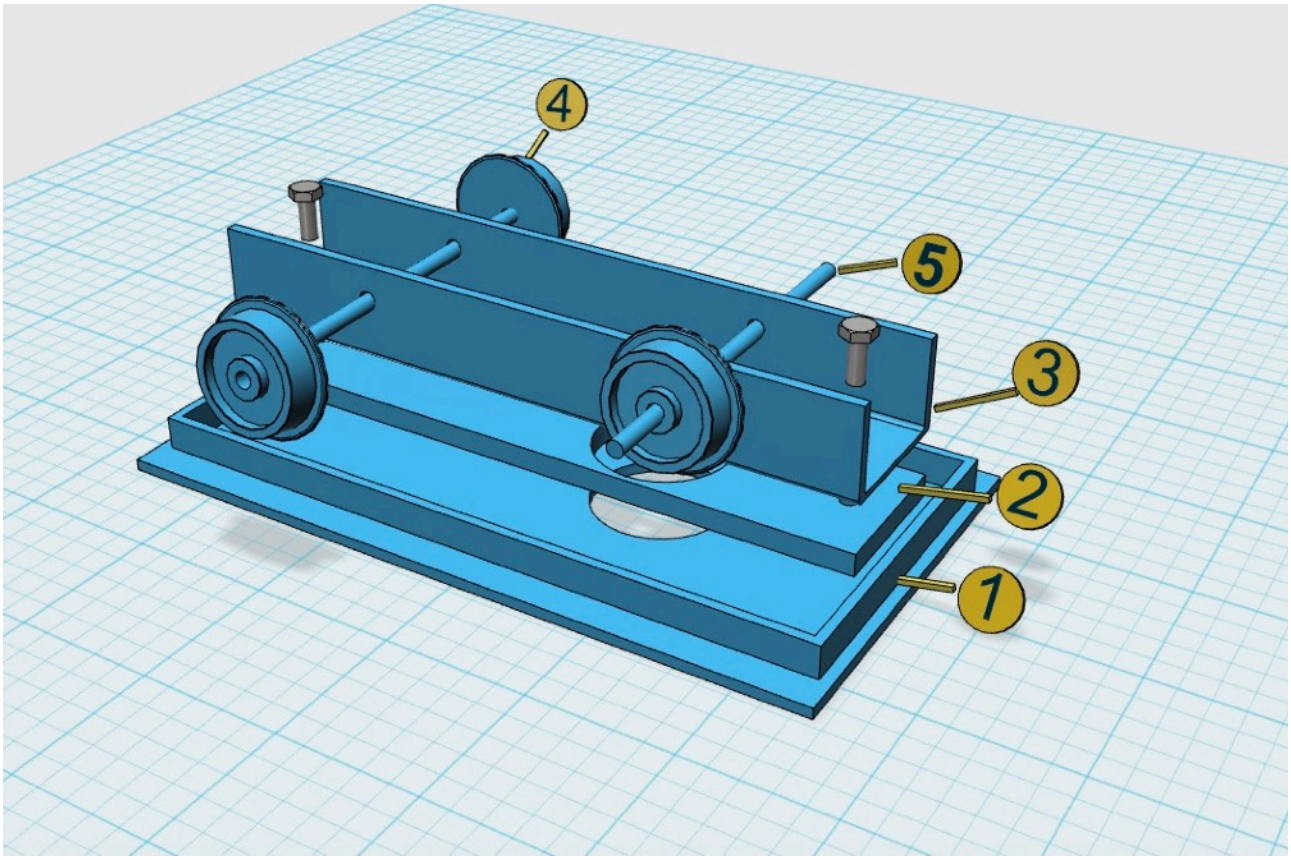

Frame 1a STL

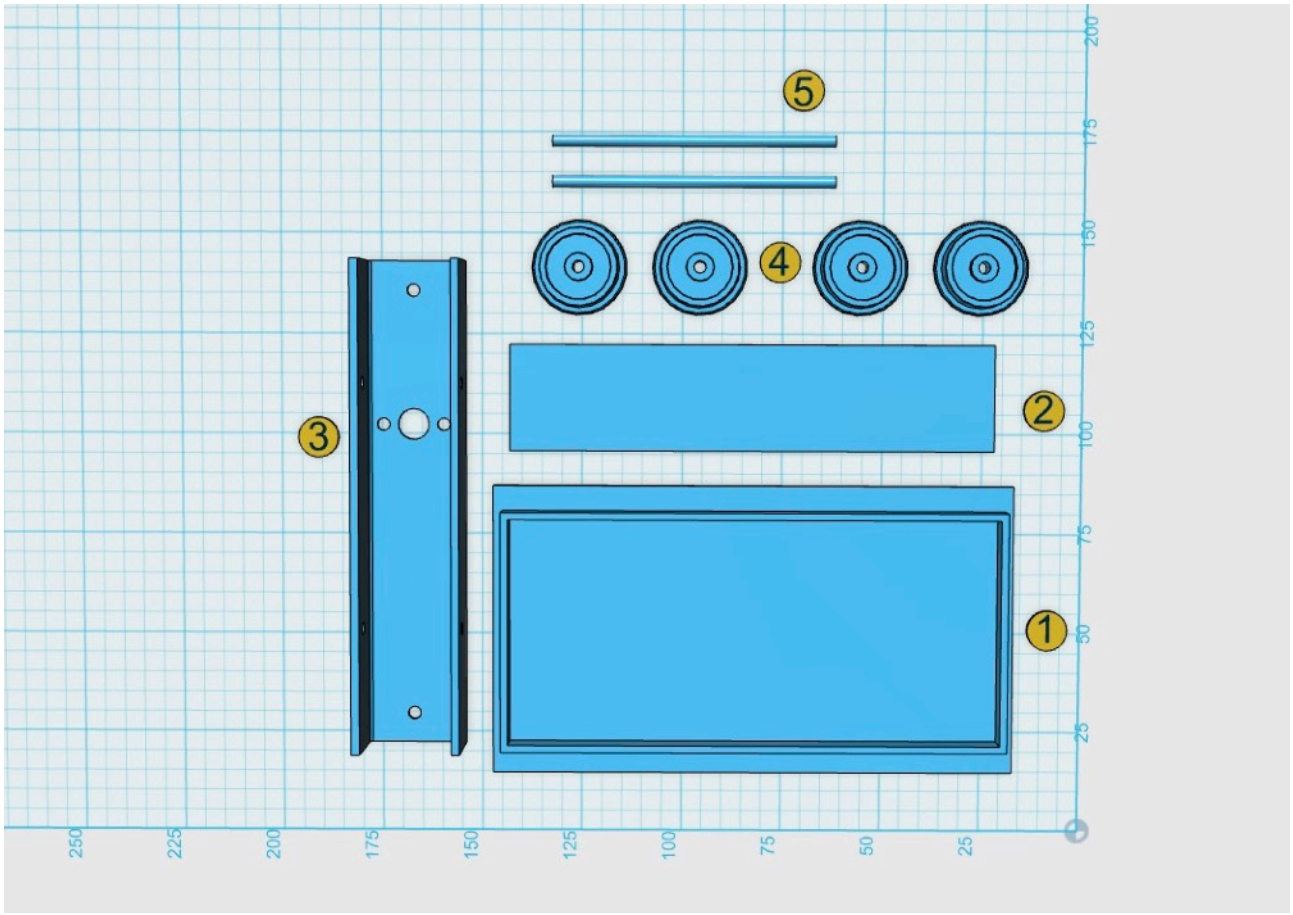

Frame 1b STL

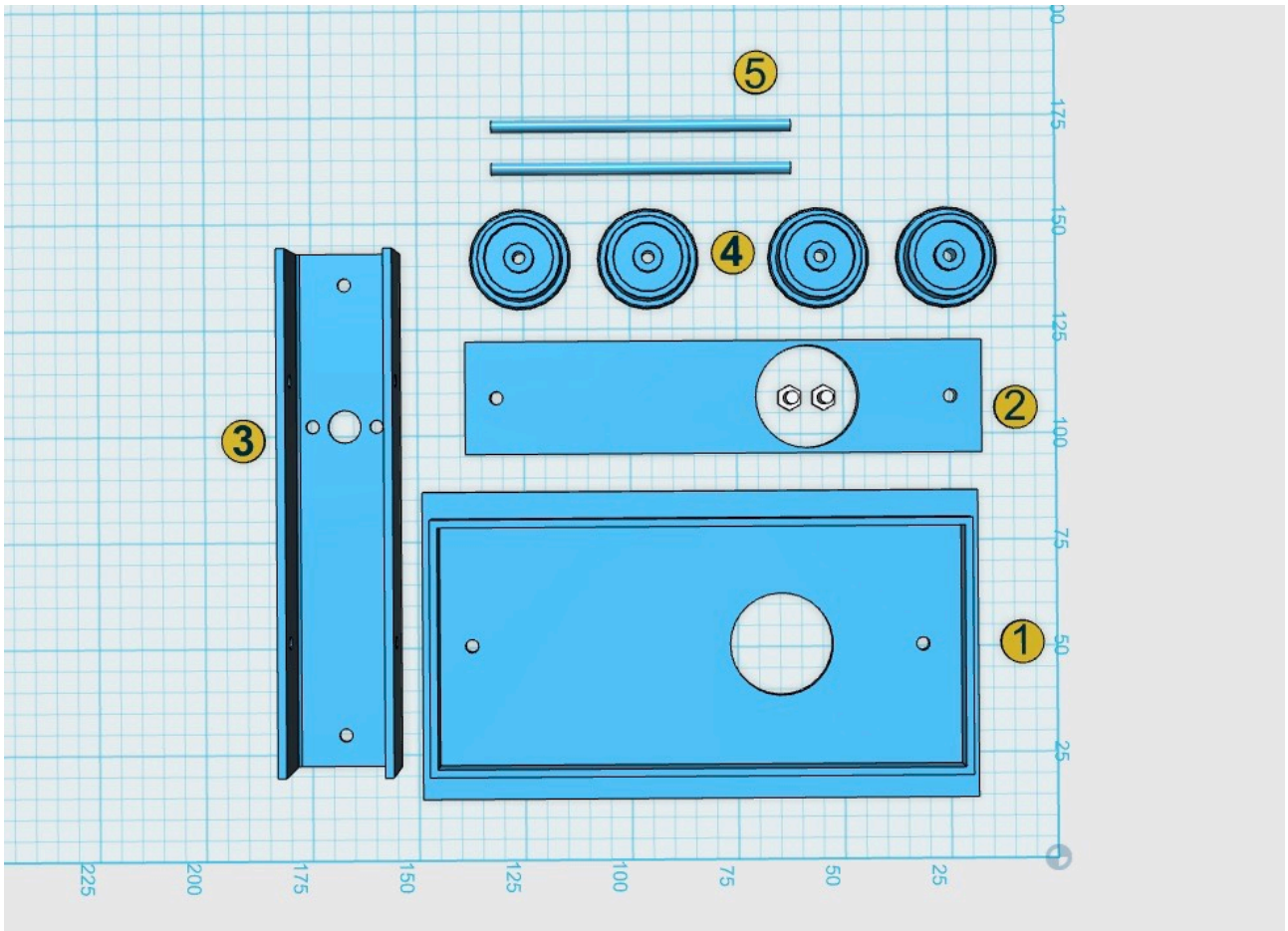

Frame 2

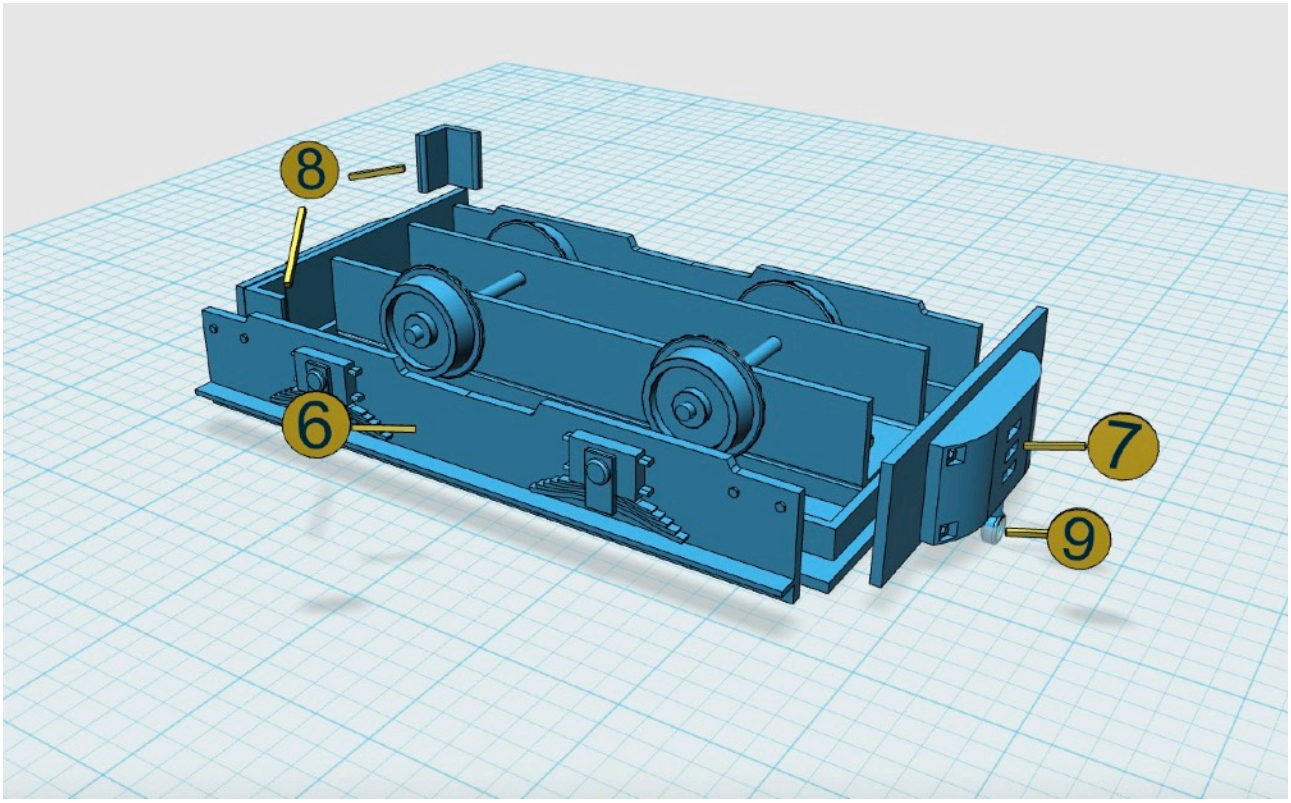

Frame 2

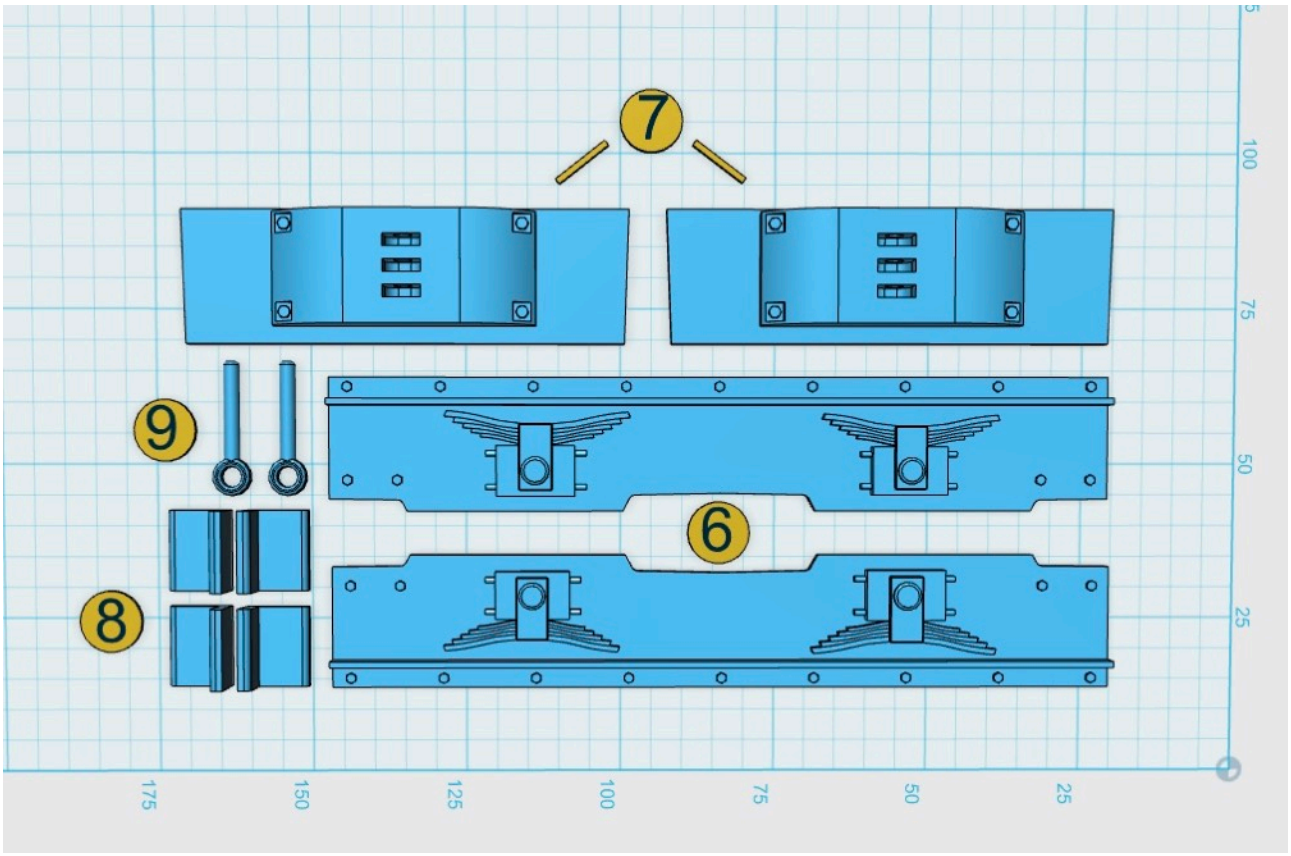

Hood

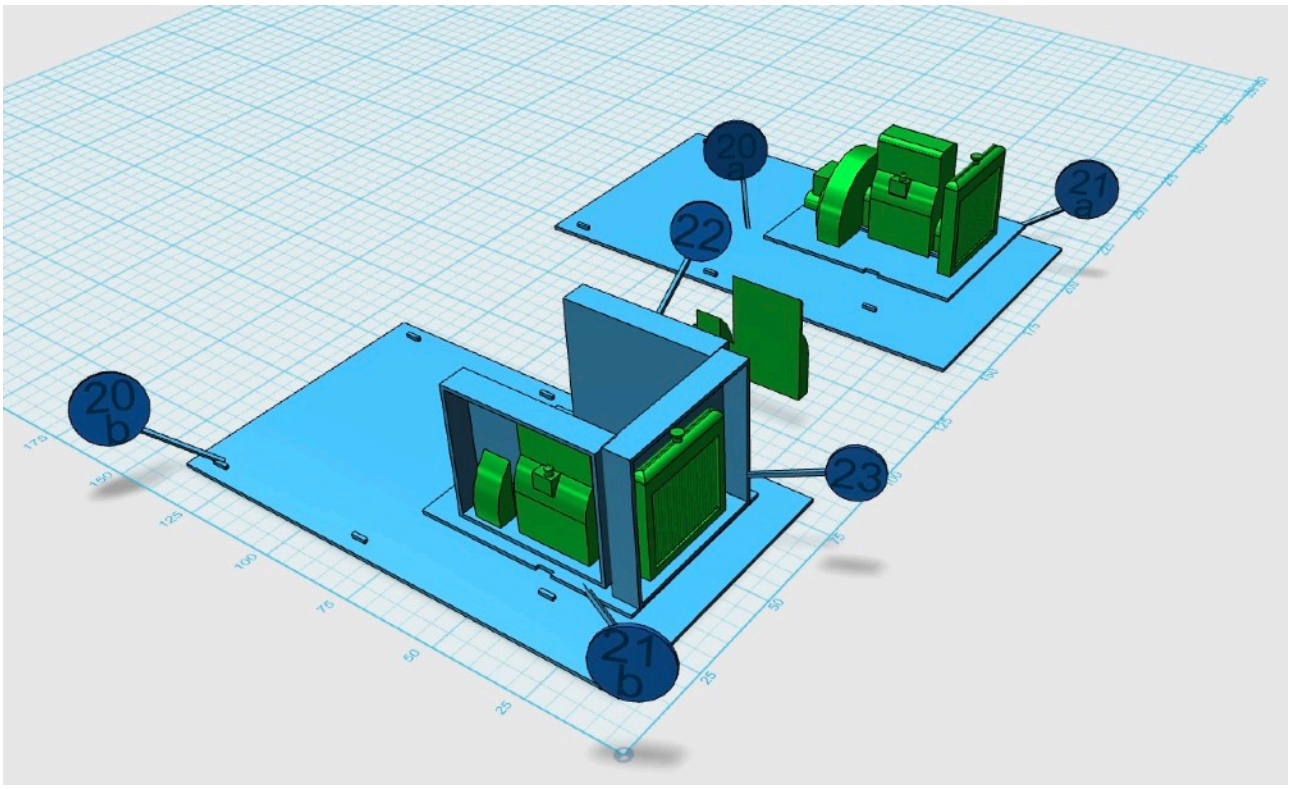

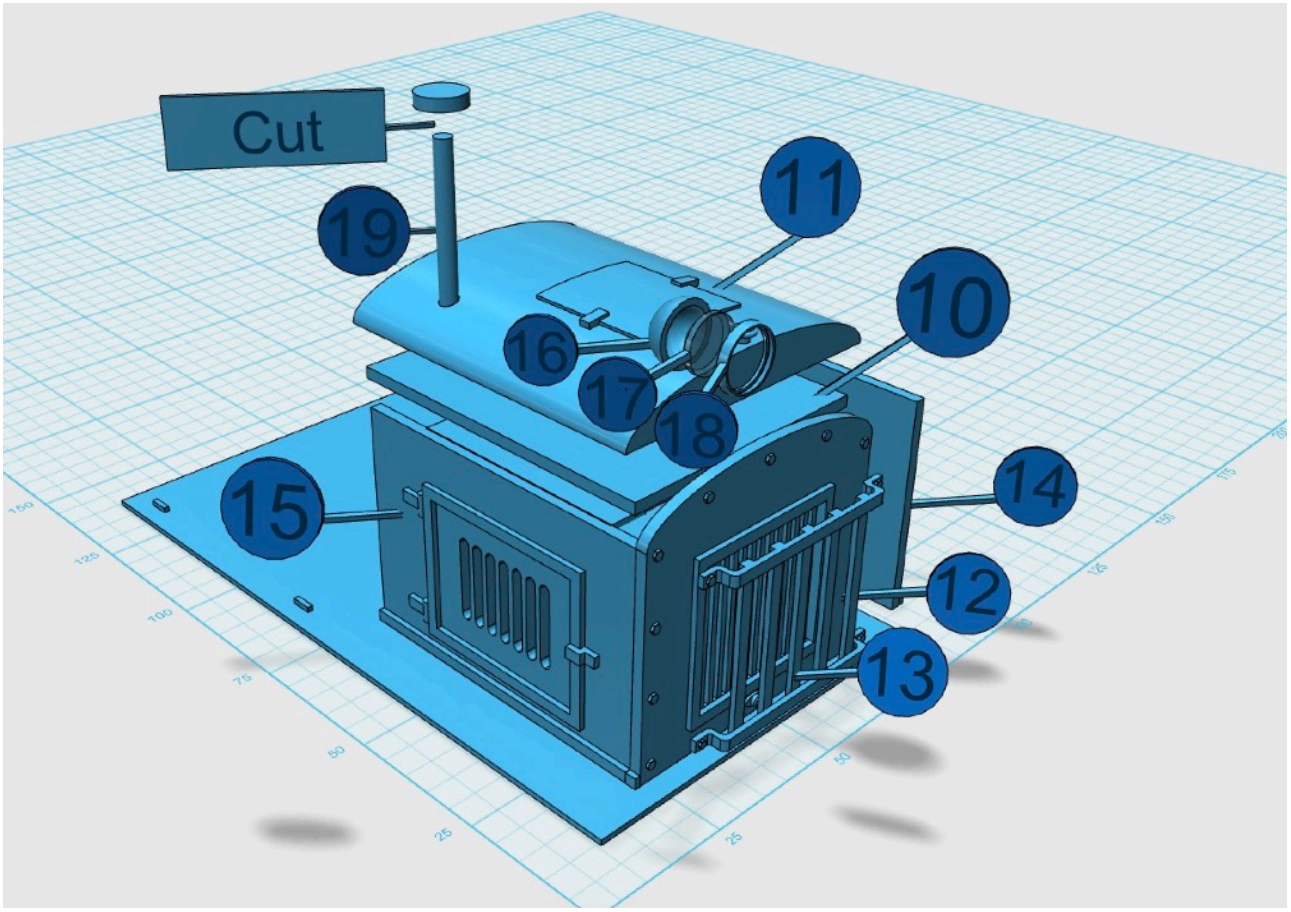

Hood 1

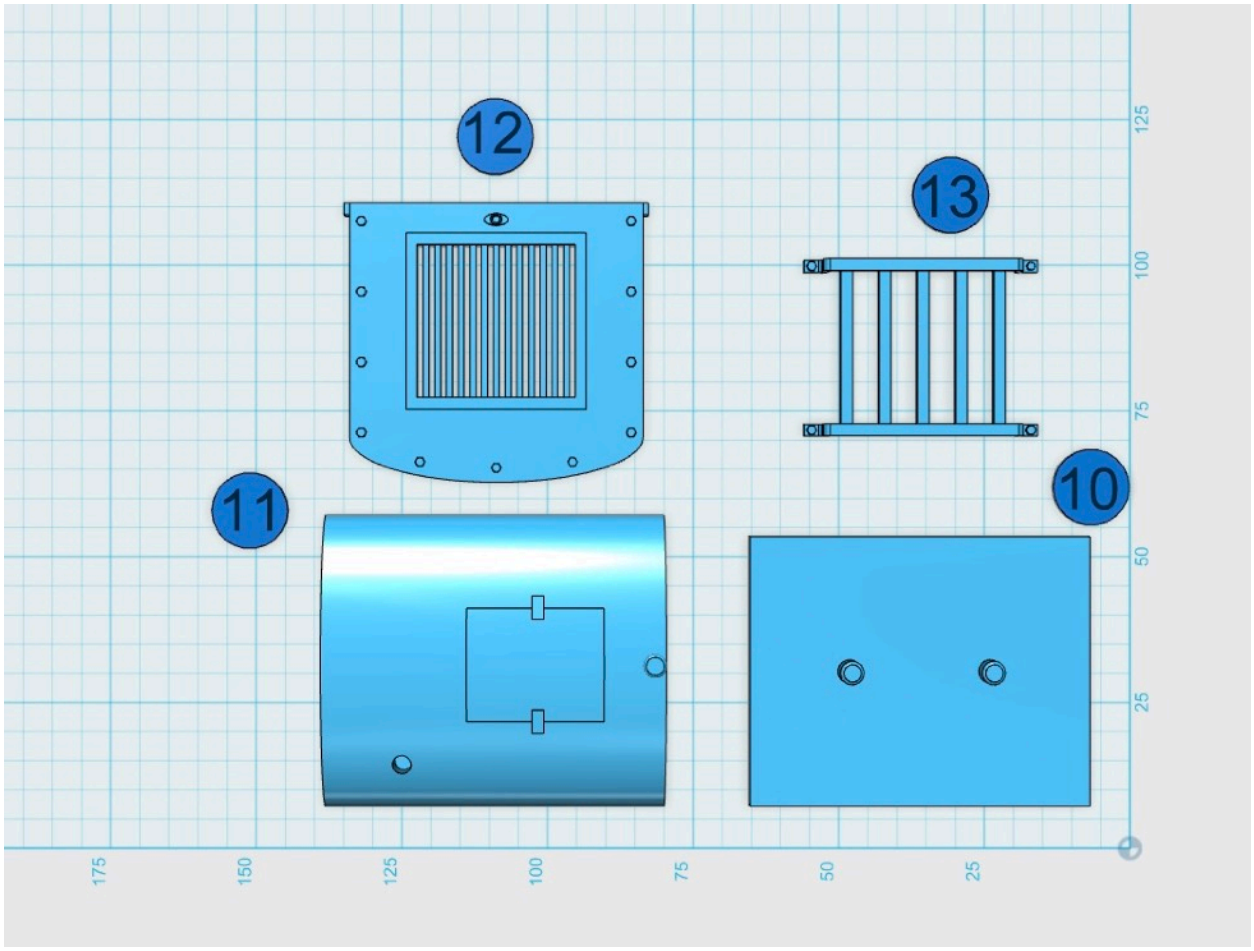
12
13
11
10
125
100
75
50
25
175
150
125
100
75
50
25

Hood 2

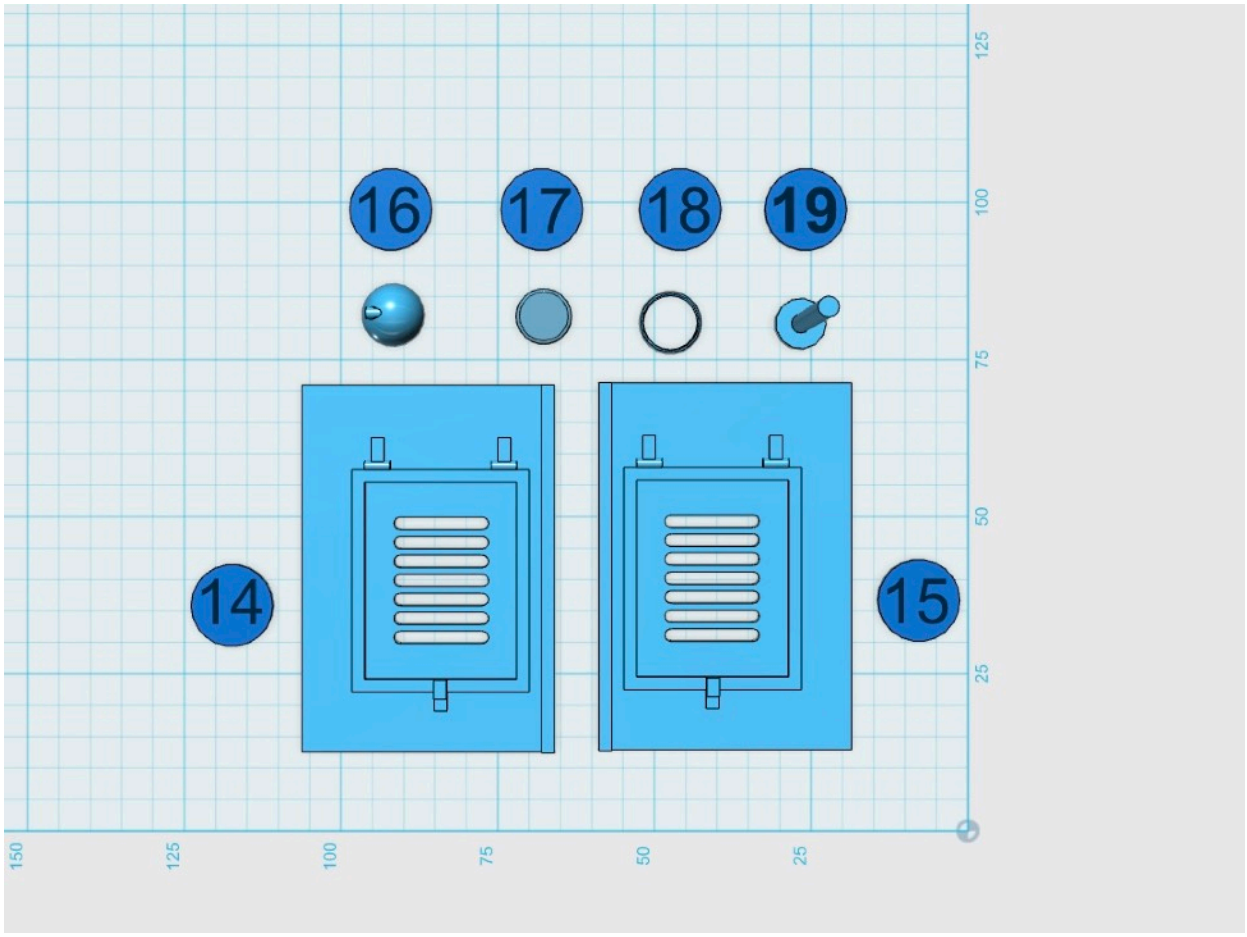
16
17
18
19
14
15
125
100
75
50
25
150
125
100
75
50
25

Hood 3a

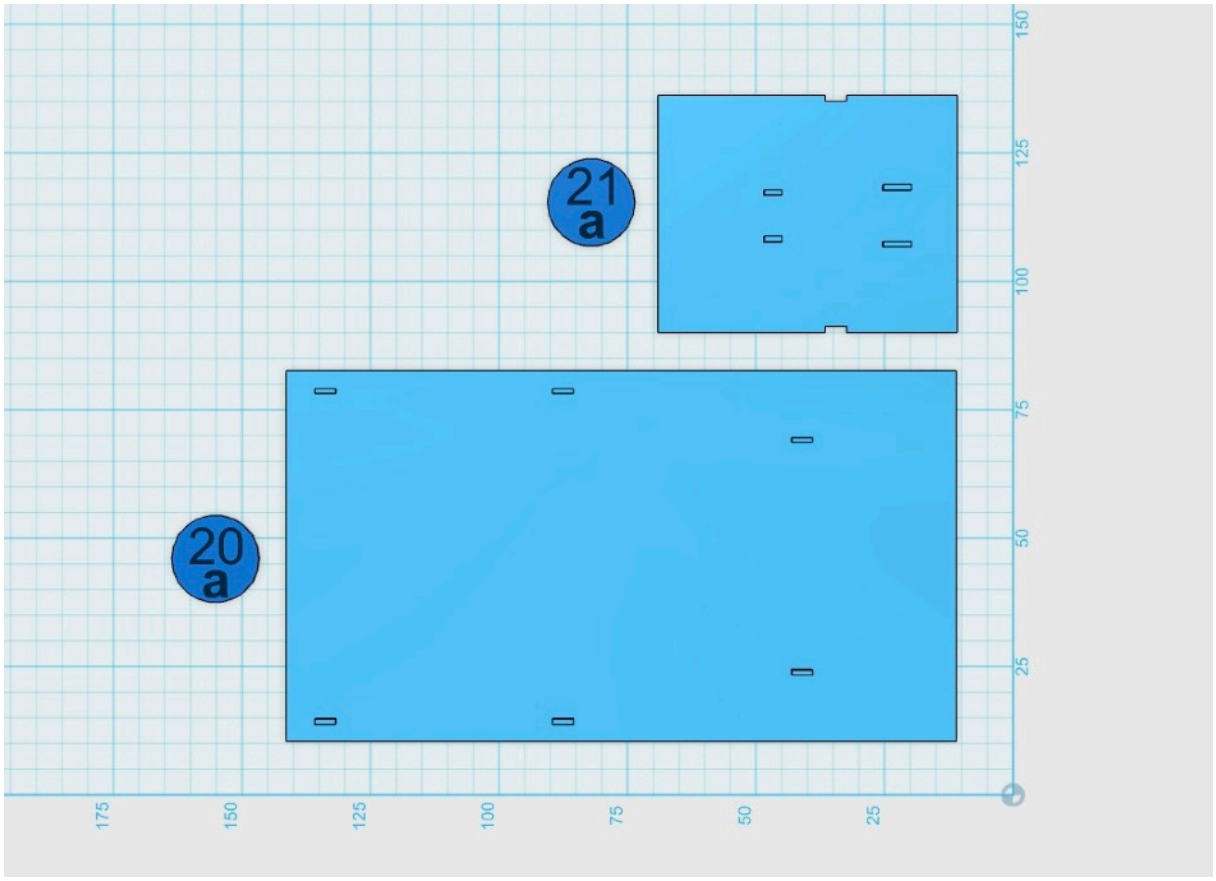

Hood 3b

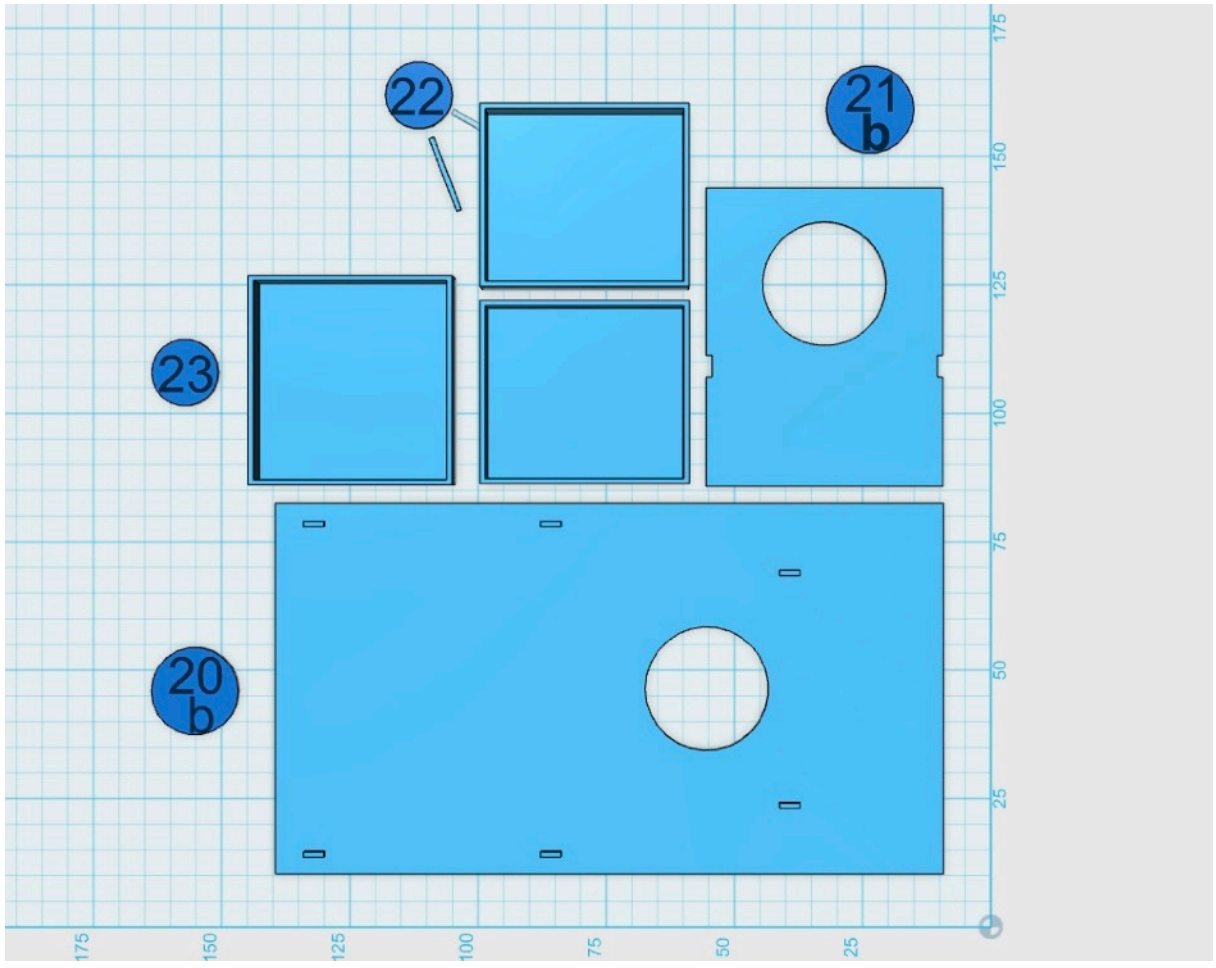

Engine

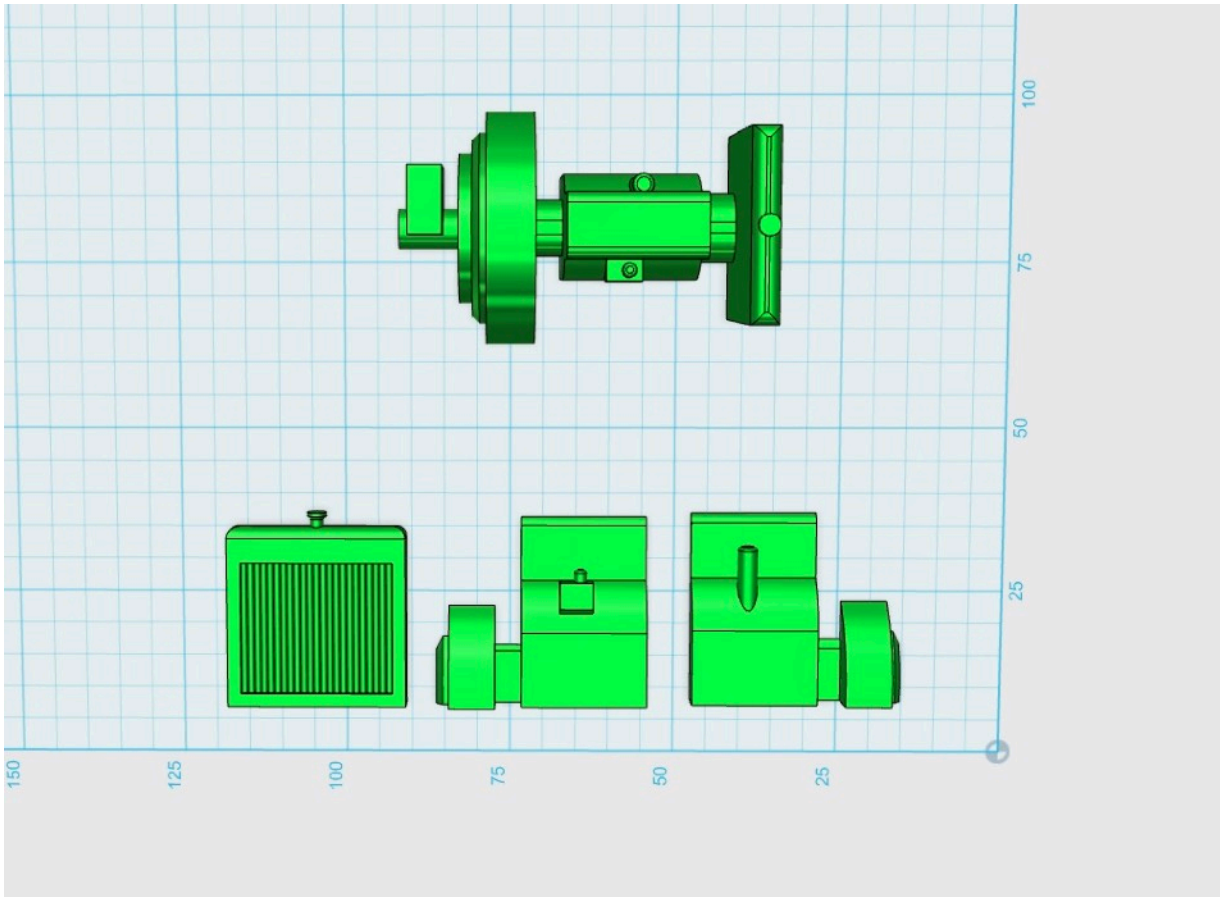

Cab

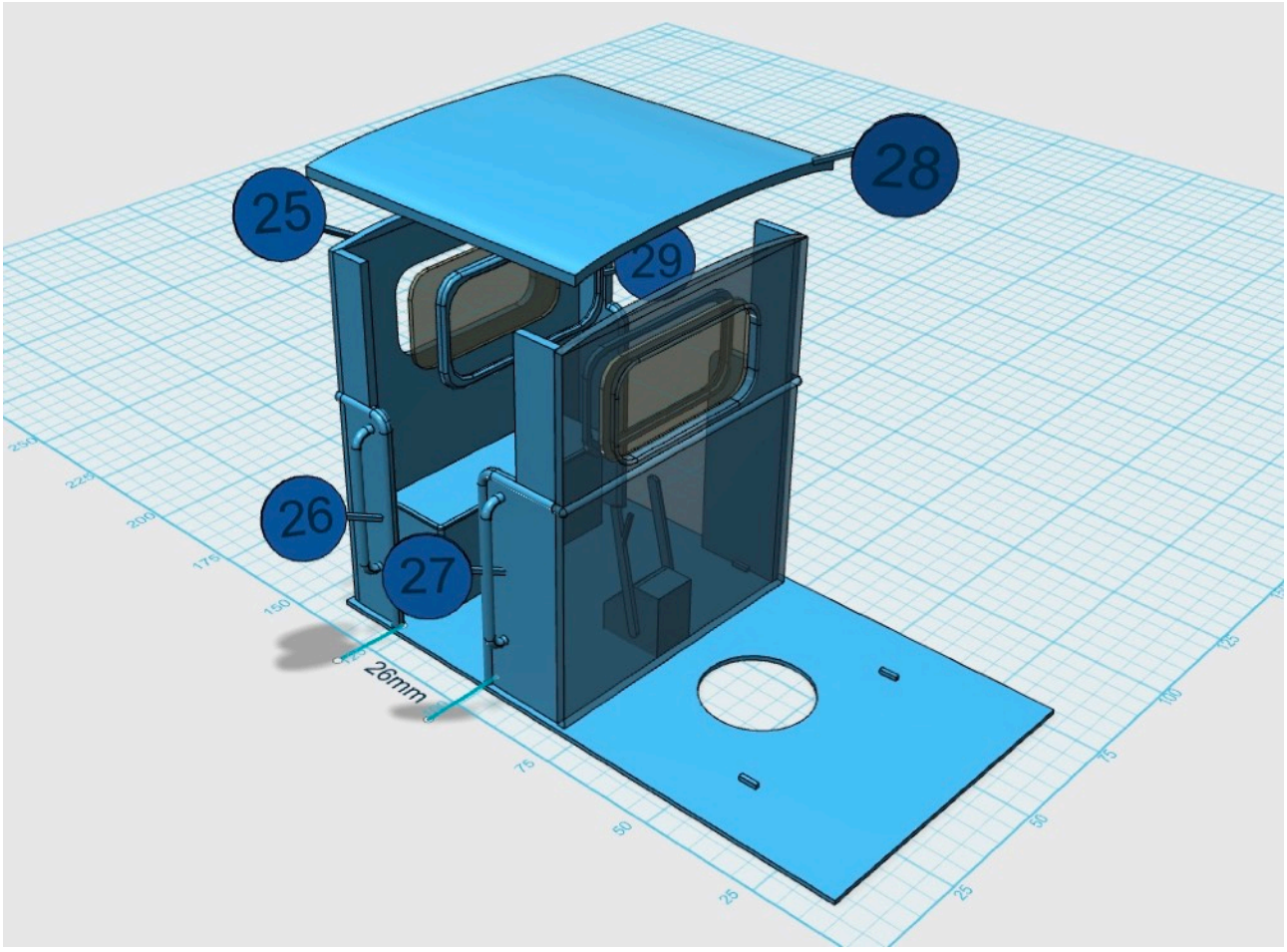

Cab1a

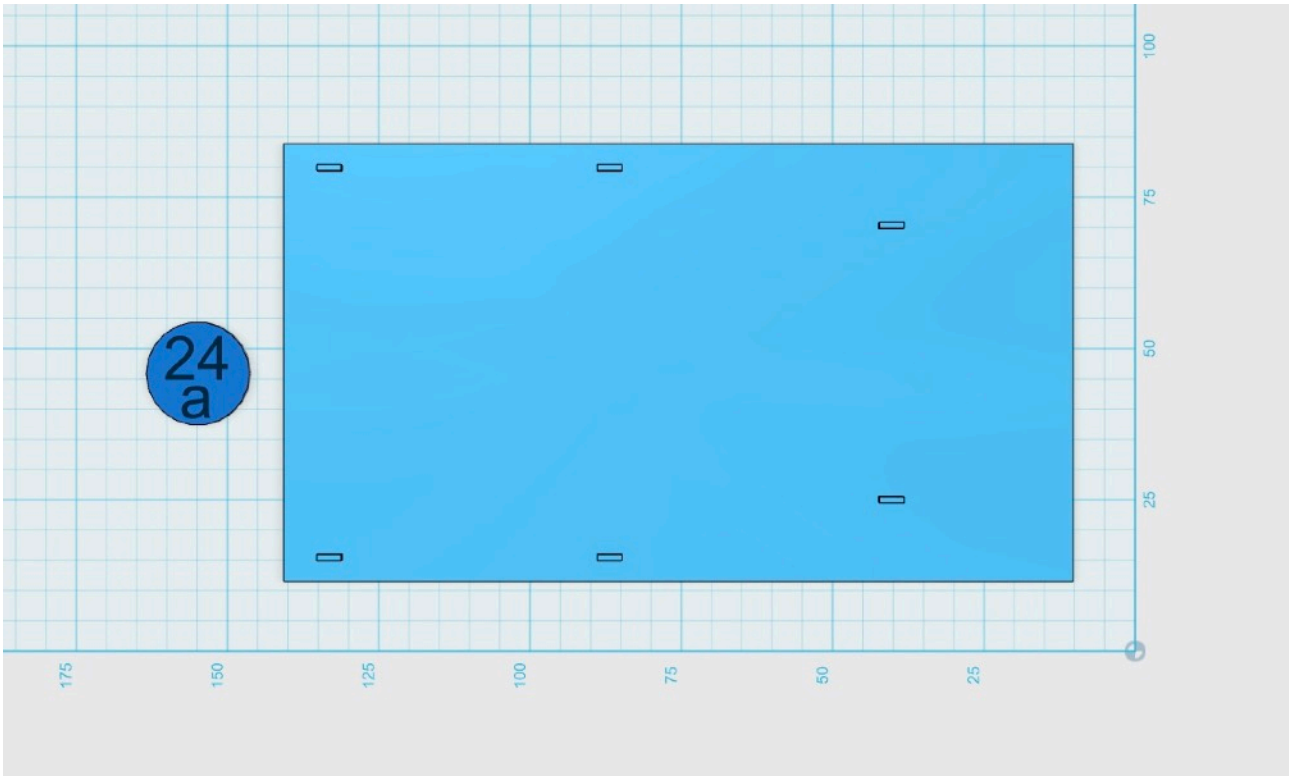
24
a
175
150
125
100
75
50
25
100
75
50
25

Cab1b

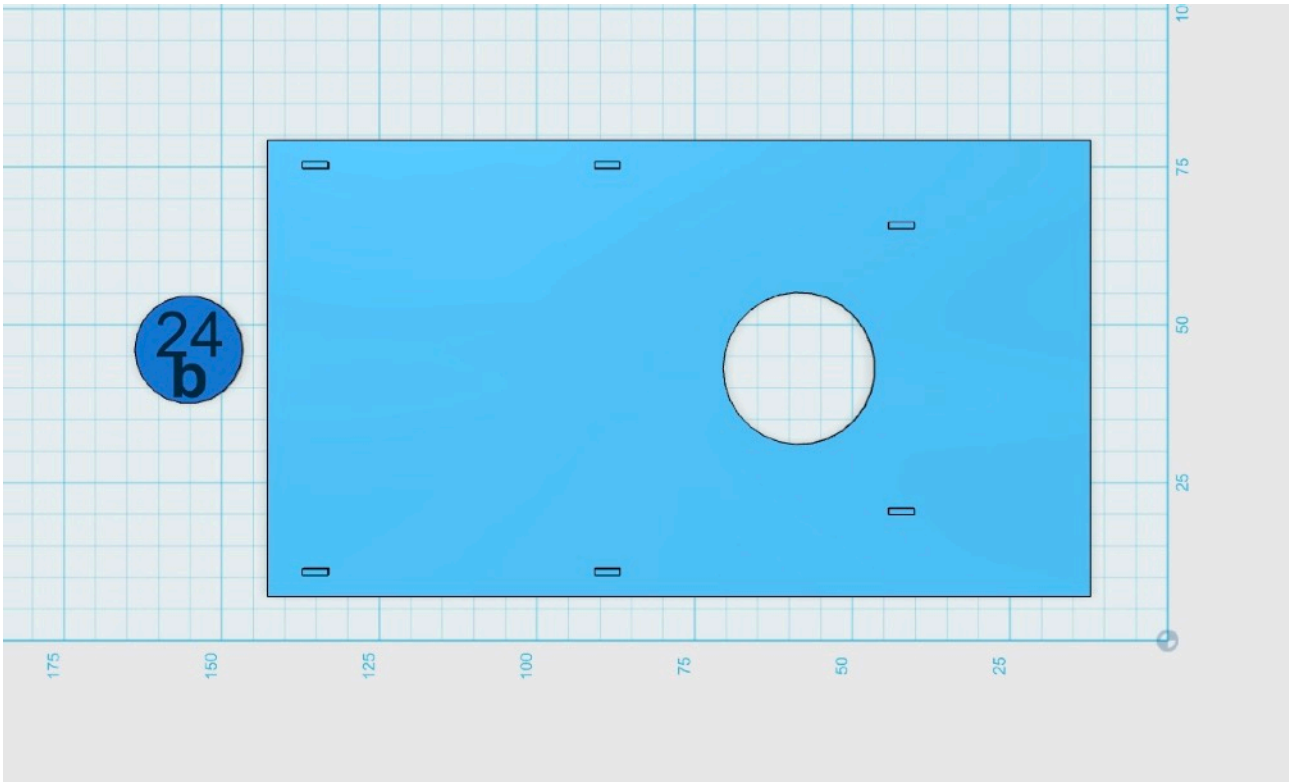
24
b
175
150
125
100
75
50
25
10
75
50
25

Cab2

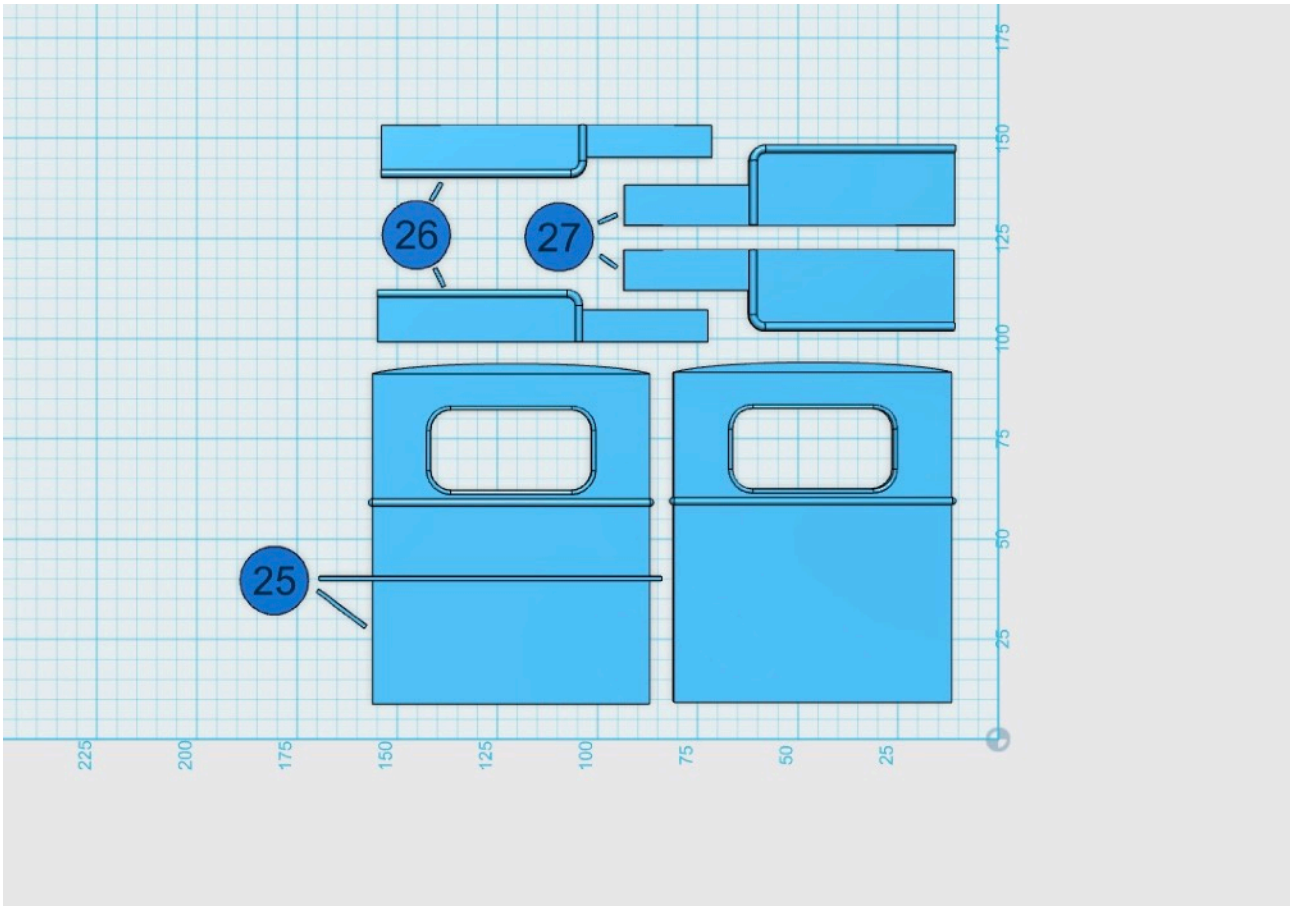
26
27
25
225
200
175
150
125
100
75
50
25

Cab3

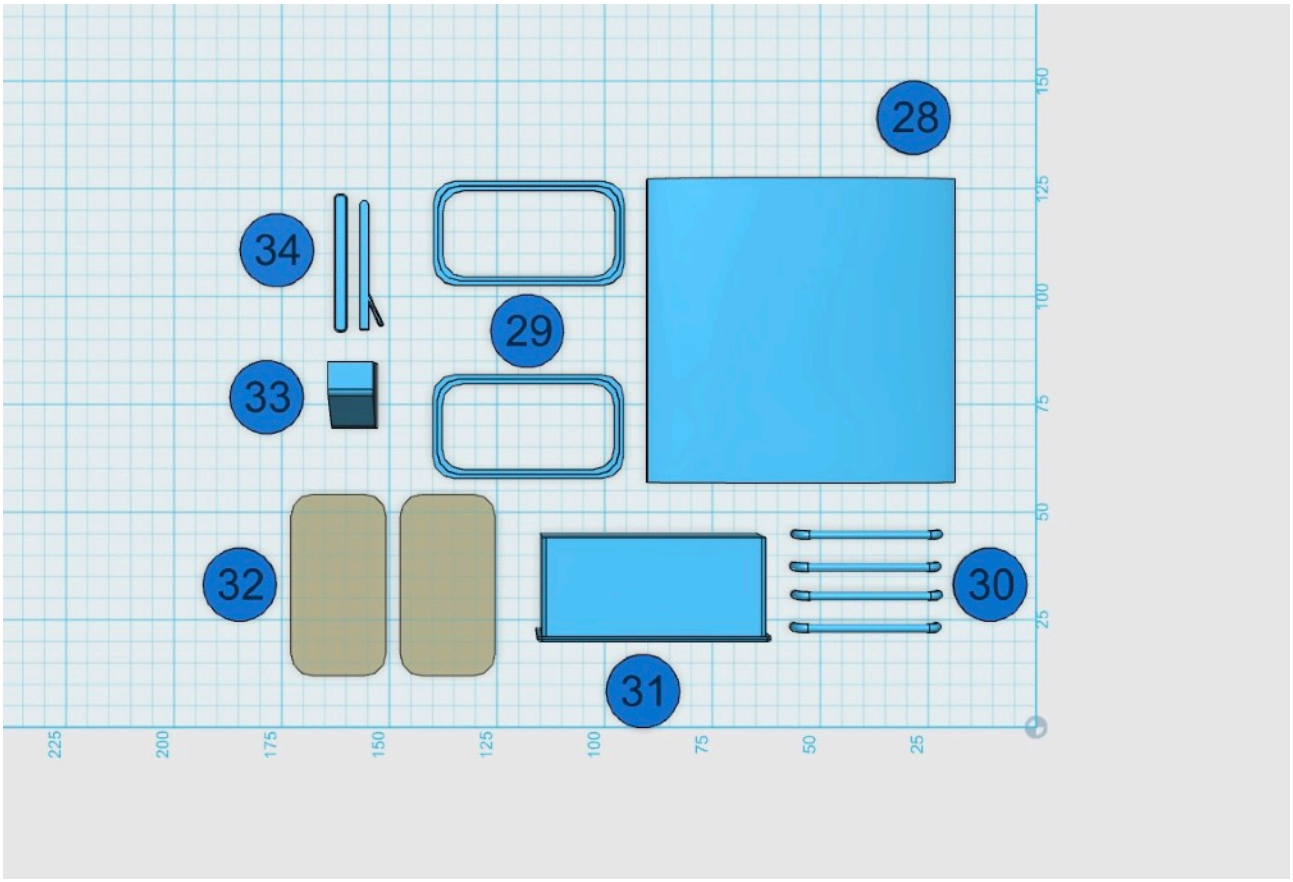
28
34
29
33
32
30
31
225
200
175
150
125
100
75
50
25