3D Printed OO Scale Working Semaphore Signals

MK, V1.0, 21/8/2018

modelrailmusings.weebly.com

Overview

These are working models of several types of OO scale semaphore signals. They are intended to be easy to assemble and drive, using Cobalt or Tortoise stall motors, servos or similar. All are variations on a single theme, generated from one OpenSCAD script. The signals are of no specific prototype, but loosely based on GWR practice. Some detail has been omitted or simplified for ease of assembly.

To build a model, you will need to:

- print one signal file (designed for ABS at low resolution, 0.30mm, no rafts or supports)
- print one arm file (designed for ABS at high resolution, 0.12mm, no rafts or supports)
- obtain several lengths of 0.5mm brass rod or wire - this should be available from most hobby shops.

3D Printing

These models were designed for and printed in ABS on a FlashForge CreatorPro. The signal files should be printed in low resolution (0.30mm). The arm files should be printed in high resolution (0.12mm). Other parameters are the defaults, and no raft or supports are needed.

The names of the signal files are of the form "semaphore-oo-LRC.stl", where L,C and R are the number of arms on the left, center and right posts respectively. The commonest type (and the easiest to build) is "semaphore-oo-010.stl". It is recommended that you try this one before moving on to the more interesting types.

Note that the underside of the model is actually the front of the signal.

Each arm file contains enough signal arms for the most complex signal. The "semaphore-arm-lq.stl" file contains GWR lower-quadrant arms, and are the normal type to use with these signals. The "semaphore-arm-uq.stl" file contains upper quadrant variants - these are not true upper quadrant designs, but will let you make the signal work that way.

Assembly

First, clean up and check the parts:

- break off the small support plates form under the finials
- check that the wire hole in the signal arms is open and will accept a length of wire
- if using the mounting unit, ensure that the signal can be inserted and removed. This is likely to be tight at first, but pushing it on and off a few times will loosen it up. Be careful when pulling the signal out - hold it by the post, not the ground plate, which is quite fragile!
- ensure that the signal arms fit in the pivot holes and rotate freely. The signal arms should move between horizontal and 45 degrees. The pivot pin is fragile, so when removing a tight one, push from the back with a screwdriver or similar object - do NOT pull on the arm.
- ensure that the rocking bar fits onto the pivot under the bracket and rotates freely. The pin and/or hole may need to be cleaned up
- check that the ladder fits properly
- check that the back girder clips on correctly. If it doesn't quite fit, then you probably have it backwards!

Basic painting should probably be done before final assembly, though portions can be done when the model is finished.

All pieces should just snap together, although a small amount of superglue may be required to complete the job, especially on the back girders.

The activating wire for each signal arm should be bent from 0.5mm brass rod. One end should first be bent according to the diagram, then the other end inserted into the slot beneath the signal arm. The wire should be carefully pushed through until it emerges from the end of the post, and the bent section should settle into place in the slot. The signal arm can now be added, inserting the wire into the drive hole at the same time as the pivot goes into the post. The signal arm should now move back and forth between the horizontal and 45 degree positions with complete freedom - there should be no binding.

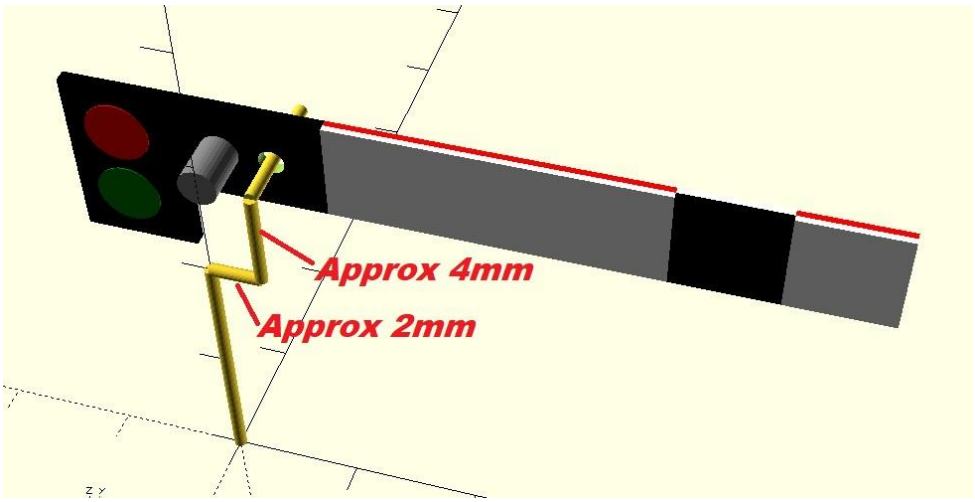

For a bracket signal, the signal wire from the doll post needs to be attached to the rocking bar. Check the length, moving the signal and rocking bar to find the range of movement, then bend the wire at 90 degrees and feed it through the hole. The second activating wire then needs to be attached to the rocking bar. This is best done by feeding another length of unbent wire down through the hole in the platform into the long slot in the main post. Once it is below the platform, it can be bent out slightly and then at 90 degrees to fit into the hole in the rocking bar. See the pictures for details. There will be some resistance to movement (more than a simple signal), but not too much.

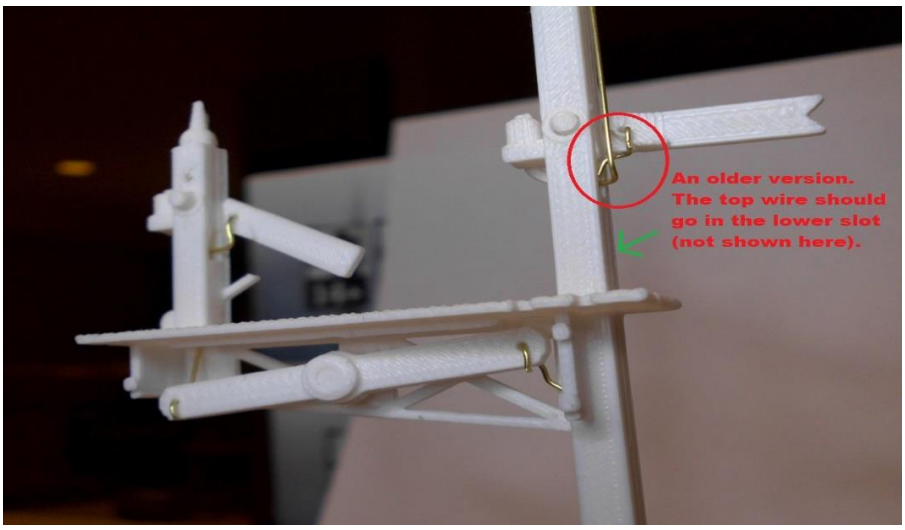

The upper signal on a two-arm post should have its wire run outside the post, and then bent at right angles to enter the lower slot under the lower arm. This can be bent sideways to avoid interference with the lower arm wire.

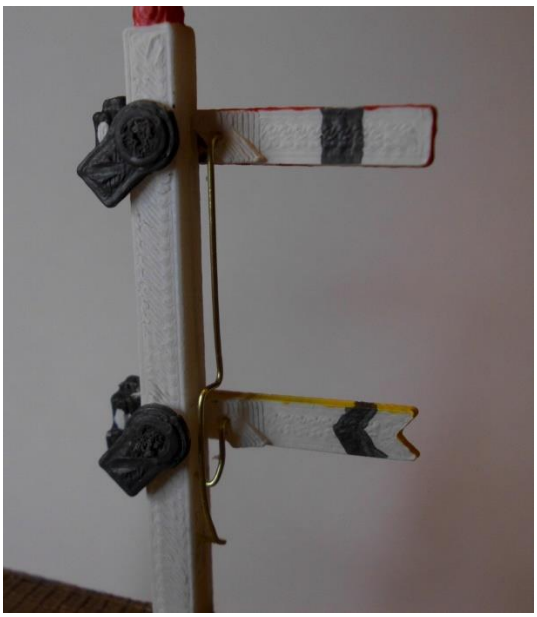

When each signal is working properly, a locking ring should be pressed onto the pivot to hold it in place. For the signal arms, this forms the back-blinder. This should be oriented so that blocks the green spectacle of the arm, rotated 135 degrees from the arm. [That was so the signalman could see whether the lamp was lit and the signal properly at danger.] For the rocking bar under each bracket, orient it horizontally. These should just snap on with a little bit of force. Two slightly different sizes have been included to allow for printing variations. If still too tight, they can be opened slightly using a screwdriver, file or similar tool.

The wires emerging from the bottom of the post should be bent into small loops to allow the drive wire form the Cobalt motor to be attached. The easiest way is to wrap it around another piece of wire, then tighten things up with a pair of pliers.