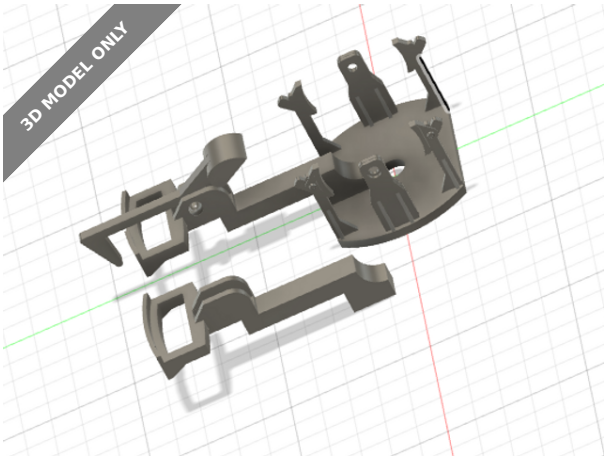

LGB Wagon Drehgestell / Bogie

linuxpaul

VIEW IN BROWSER

updated 25. 9. 2022 | published 25. 9. 2022

Summary

LGB Wagon Drehgestell / Bogie

Hobby & Makers > Other Ideas

Tags: bogie lgb drehgestell wagion

In Teile zerlegt, um den Druck auf fdm-Druckern zu erleichtern (STEP Datei). Die Teile müssen zusammengeklebt werden / Spitted into parts to make it easier to print on fdm printers (STEP File). Parts have to be glued together

Model files



drehgestell.stl



drehgestell.step

License



This work is licensed under a
Creative Commons (4.0 International License)

Attribution

✖ | Sharing without ATTRIBUTION
✔ | Remix Culture allowed
✔ | Commercial Use
✔ | Free Cultural Works
✔ | Meets Open Definition