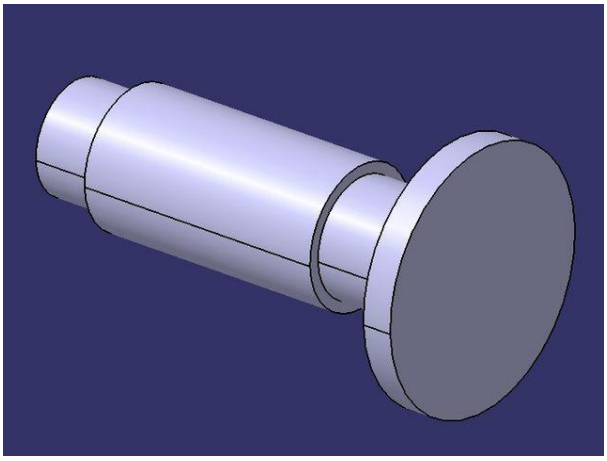

Model train bumper 1:87 H0

P **Petr A.**

VIEW IN BROWSER

updated 18. 9. 2021 | published 17. 9. 2021

Summary

Bumper replacement for old PIKO models.

1.12 hrs	1 pcs	0.05 mm	2 ml	Prusa SL1

Toys & Games > Other Toys & Games

Replacement for bumpers for H0 (1:87 scale) model train. Made for old PIKO models but could fit to various brands.

Printable on UV resin printers with time approx 1h with layer 0,05 mm.

Model files



bumper_h0.stl

Print files



bumper_h0.sl1

1.12 hrs 2 ml 0.05 mm 35s/9s Prusa SL1

12 pcs on bed

License

This work is licensed under a
Creative Commons (International License)

Public Domain

✔ | Sharing without ATTRIBUTION
✔ | Remix Culture allowed
✔ | Commercial Use
✔ | Free Cultural Works
✔ | Meets Open Definition